EDTZ-42420-4ERR

DIGIT SIZE | NUMBER OF ZONES | ELECTRONIC LETTERING | TIME COLOR | LOCATION COLOR

SPECIFICATIONS

TYPE: ---------- LED 15 CHARACTER ALPHANUMERIC ***(AVAILABLE IN Red, Green, Yellow or Blue)***
DISPLAY: ---------- 4-DIGIT TIME 5 by 7 DOT-MATRIX ***(AVAILABLE IN Red, Green, Yellow or Blue)***
CHARACTER HEIGHT: -------- **2"**(50.8 mm) ***TIME HR/MIN*** **1.2"**(25.4mm) ***15 CHARACTER LOCATION DISPLAY***
VISIBILITY: ---------- 75 Ft. (22.86 METERS)
POWER REQUIREMENTS: -- 100-240V 50~60Hz ***(12vdc SWITCHING POWER SUPPLY)***.
FRAME: ---------- ALUMINUM ***(BLACK ANODIZED FINISH)***
DIMENSIONS: ---------- 8.25" x 64.25" x 1.35"
WEIGHT: ---------- 23.25 lbs.
OPERATING TEMP.: ---------- -17° TO 190° F
HUMIDITY: ---------- 0% TO 95% NON-CONDENSING
OPERATING MODE: ---------- 31 DAY LIGHT SAVINGS, 31TIME ZONES,10 YEAR BACKUP WITH UP TWO ONE SECOND A YEAR ACCURACY, EYELET SURFACE or CEILING MOUNT, PC INTERFACE WITH ***DDS*** SOFTWARE

ALL CLOCKS USE THE DALLAS DS32 SERIES RTC PARTS, AND OUR FIRMWARE CONTROL, TO GET THE ONE SEC A YEAR ACCURACY.

1 SEC A YEAR ACCURATE (TCXO)

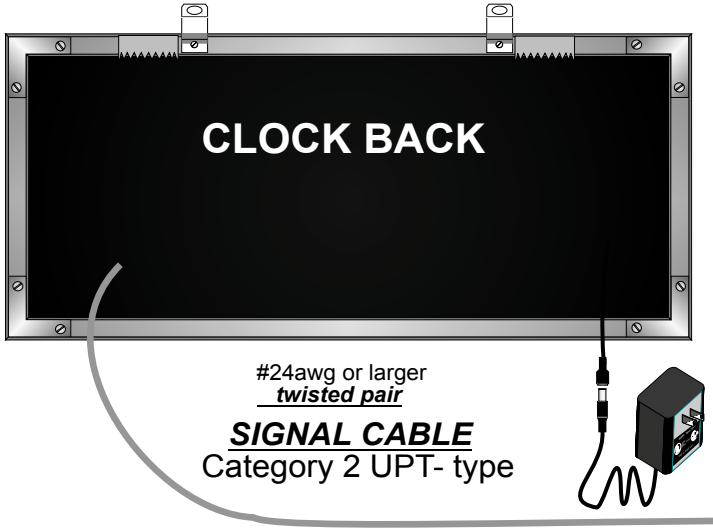

THE PC IS USED TO SET THE LOCATION DISPLAY AND TIME. THE CLOCK CAN RUN ON ITS ON WITHOUT THE PC.

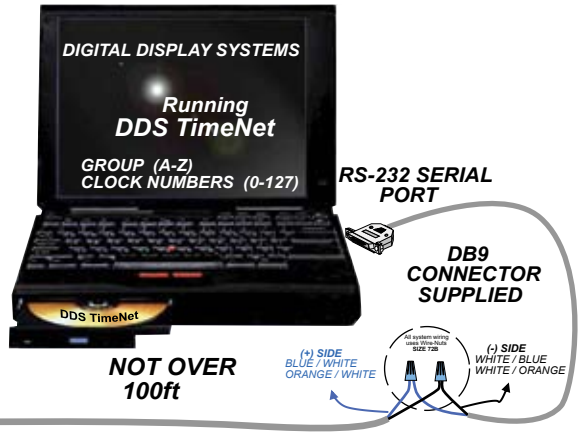

MOUNTING

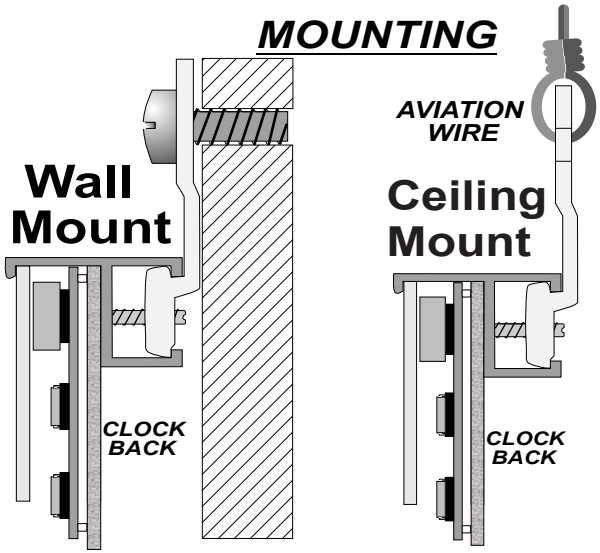

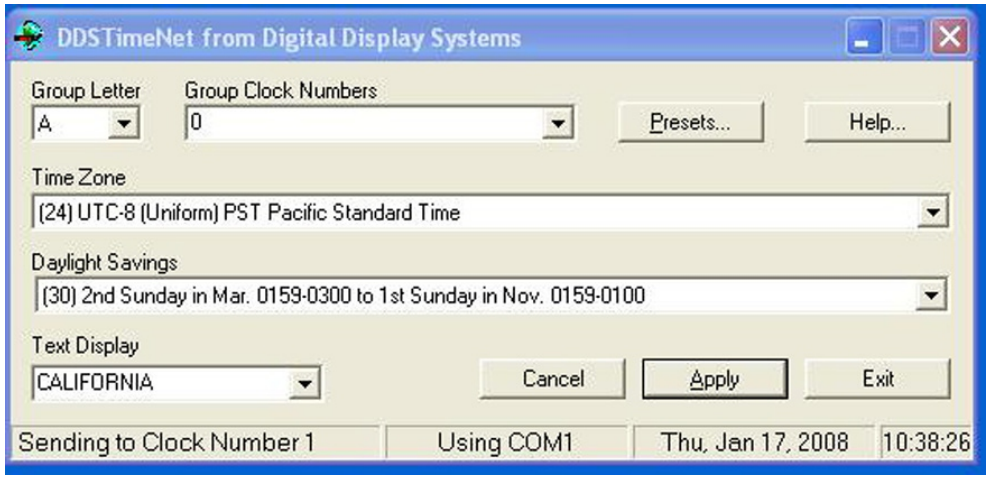

RS-232 SERIAL PORT

DB9 CONNECTOR SUPPLIED

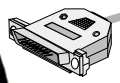

RS-232 NOT OVER 100ft

ALL CLOCKS USE THE DALLAS DS32 SERIES RTC PARTS, AND OUR FIRMWARE CONTROL, TO GET THE ONE SEC A YEAR ACCURACY.

1 SEC A YEAR ACCURATE (TCXO)

WHEN ON THE PC THE PC TIME IS UP DATING THE TIME ON THE TIME ZONE CLOCKS. WHEN THE PC IS OFF THE (0) ZONE IS UPDATING THE TIME AND THE COLON IS FLASHING ON ZONE (0).

GROUP CLOCK NUMBERS