EDTZ-42420-5ERR

NUMBER OF ZONES | ELECTRONIC LETTERING | TIME COLOR | LOCATION COLOR

SPECIFICATIONS

TYPE: ---------- DIGITAL and ***15 LINE ALPHANUMERIC*** ***(Available in RED, GREEN, YELLOW or BLUE)***
DISPLAY: ---------- 4-DIGIT, TIME ***(Available in Red, Green or Yellow or Blue)***
CHARACTER HEIGHT: --------- 2.0" (50.8 mm) HR / MIN, 1.2" (30.48mm) ***15 LINE LOCATION DISPLAY***
VISIBILITY: ---------- 75 Ft. (22.86 METERS)
POWER REQUIREMENTS: -- 100-240V 50~60Hz ***(12vdc SWITCHING POWER SUPPLY)***.
FRAME: ---------- ALUMINUM (BLACK ANODIZED FINISH OR SILVER)
DIMENSIONS: ---------- 8.25" x 83.25" x 1.35"
WEIGHT: ---------- 23.25 lbs.
OPERATING TEMP.: ---------- -17° TO 190° F
HUMIDITY: ---------- 0% TO 95% NON-CONDENSING
OPERATING MODE: ---------- 32 DAYLIGHT SAVINGS, 31 TIME ZONES,10yr BATTERY BACKUP WITH 1sec A YEAR ACCURACY, NON-GLARE LENS, PC INTERFACE WITH DDS SOFTWARE AND USB CONNECTOR.

ALL CLOCKS USE THE DALLAS DS32 SERIES RTC PARTS, AND OUR FIRMWARE CONTROL, TO GET THE ONE SEC A YEAR ACCURACY.

1 SEC A YEAR ACCURACY (TCXO)

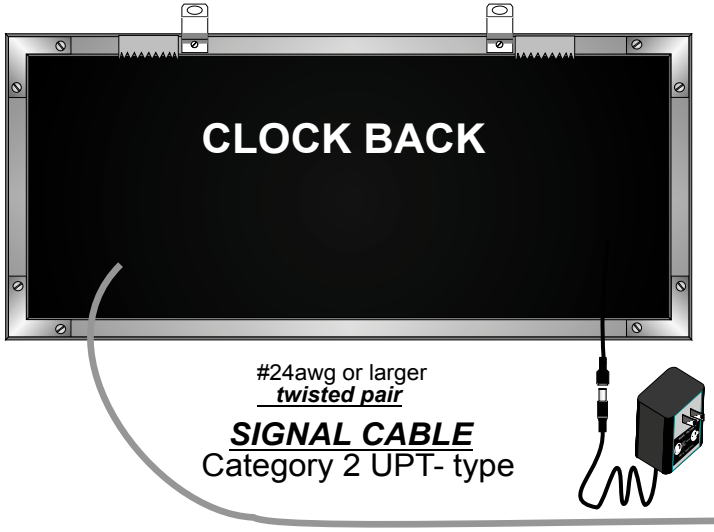

THE PC IS USED TO SET THE LOCATION DISPLAY AND TIME. THE CLOCK CAN RUN ON ITS ON WITHOUT THE PC.

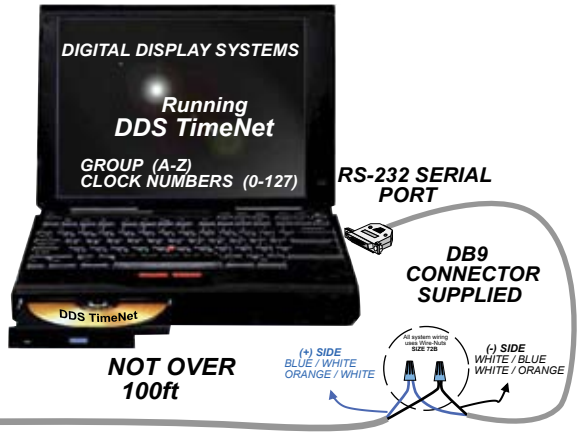

MOUNTING

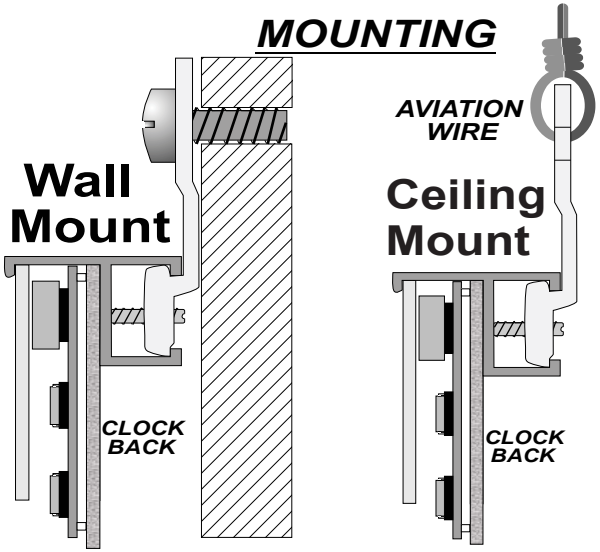

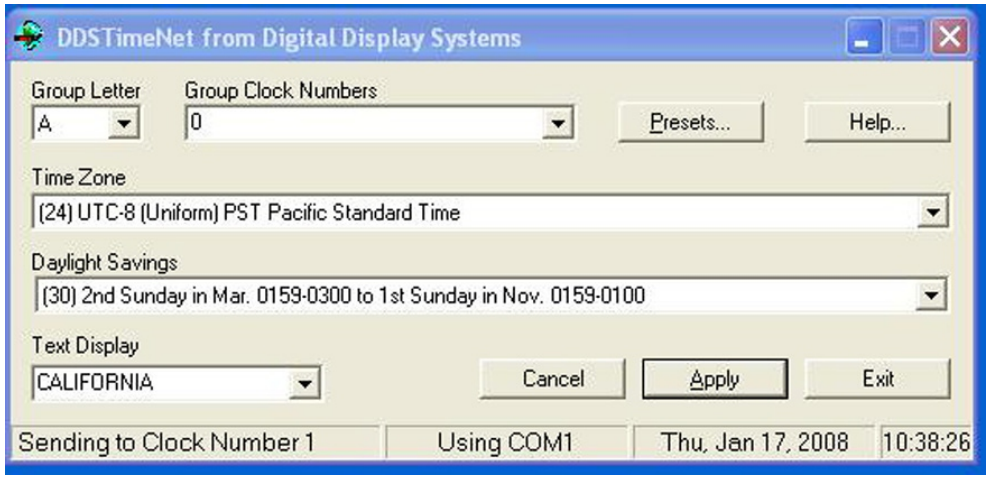

RS-232 SERIAL PORT

DB9 CONNECTOR SUPPLIED

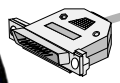

RS-232 NOT OVER 100ft

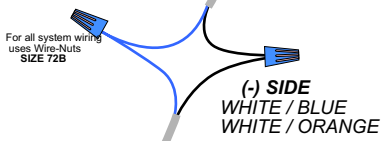

ALL CLOCKS USE THE DALLAS DS32 SERIES RTC PARTS, AND OUR FIRMWARE CONTROL, TO GET THE ONE SEC A YEAR ACCURACY.

1 SEC A YEAR ACCURATE (TCXO)

WHEN ON THE PC THE PC TIME IS UP DATING THE TIME ON THE TIME ZONE CLOCKS. WHEN THE PC IS OFF THE (0) ZONE IS UPDATING THE TIME AND THE COLON IS FLASHING ON ZONE (0).

GROUP CLOCK NUMBERS